comer industries driveshafts

End fittings		Max. torque
Tractor	Cod: C12	–
Implement	Cod: C12	–

Notes:

CE CERTIFIED

Warning !
Sections of driveline marked ⚠ are not shielded and must be shielded by an interactive guarding system.
COMER spa declines responsibility if proper guards are not provided or maintained.

Features

Series:	T
Type:	10
Code:	07.125.079.11
Description:	T100610ENC12C12
Customer's code:	–
Colour:	Black

Last drawing

Index: – Date: –

Application

–

Driveline data

X	1 3/8" Z6 DIN 9611
Y	1 3/8" Z6 DIN 9611
E	490–19.29"
I	505–19.88"
P	420–16.54"

Overlap

	Steel tubes	Guard
Max.	465–18.31"	400–15.75"
Min.	150–5.91"	85–3.35"

Greasing point

1)	–
2)	–

The dimensioning is cross to cross

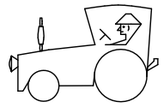

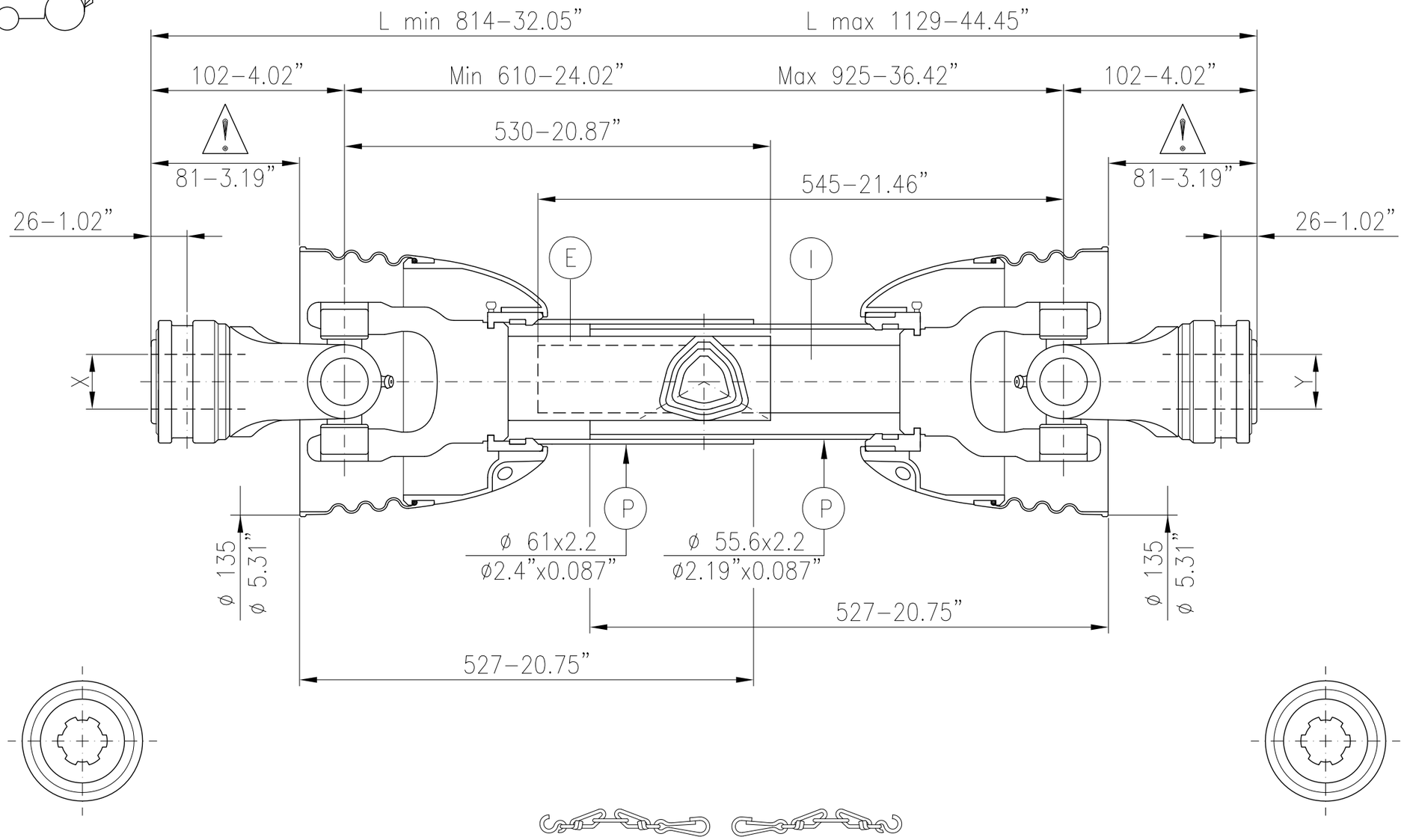

Cross and tubes

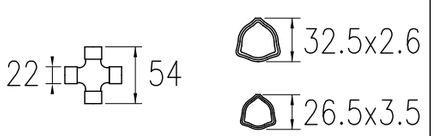

Data 540 r.p.m.				Data 1000 r.p.m.				1100 min.$^{-1}$ r.p.m. max.
KW	CV	Nm.	in.lb.	KW	CV	Nm.	in.lb.	
12	16	210	1850	18	25	172	1500	

Continuous operation data and conditions,working angle 5°, average life 1000 hours

Data for only critical velocity	
540 r.p.m.	1000 r.p.m.
Max. –	Max. –
L max. –	L max. –
Checked:	Signed by: A.Sa.

Customer: – –

Date: 28–08–20